EVA0717-F05/F07/F10
Technical Data
Direct Mount

Easytork

MOUNTING DIMENSIONS PER
ISO 5211-2001(E)
DIN 3337(OPTIONAL)
NAMUR VDI/VDE 3845

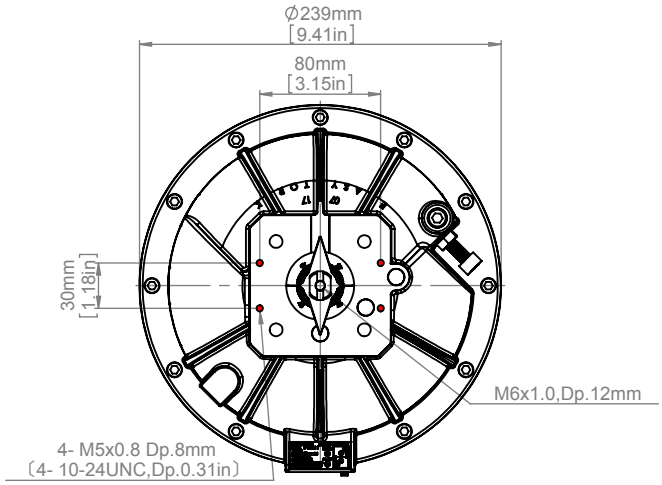

Specifications:

1. Output Torque
DA 151.7 Nm @ 5.5 bar / 1347 in-lb @ 80 psi
FS 100.9 Nm @ 5.5 bar / 895 in-lb @ 80 psi

2. Temperature Rating
-40°C to 120°C / -40°F to 248°F

3. Pressure Rating
Up to 10 bar (150 psi)

4. Weight
5.8 kg / 12.7 lb

5. Displaced Air Volume Per Stroke
0.6 L / 36.6 in^3

6. Travel Adjustment
+/- 5° per stopper bolt for standard

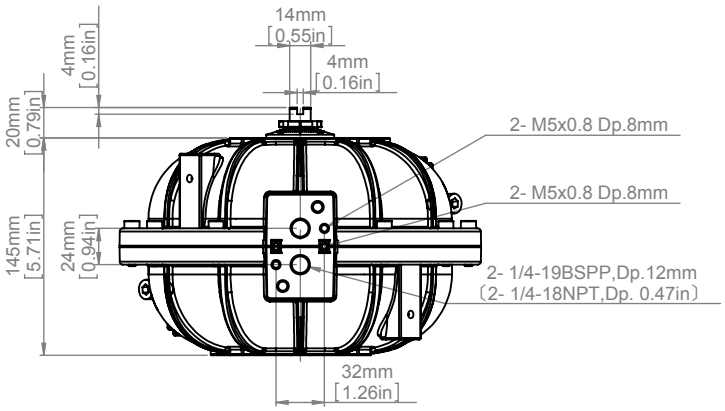

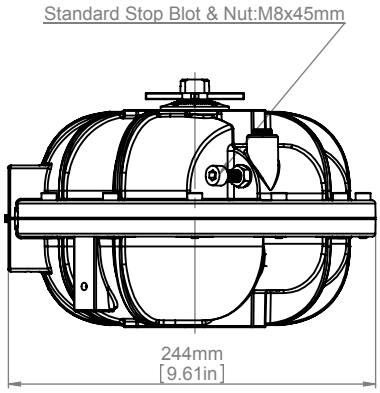

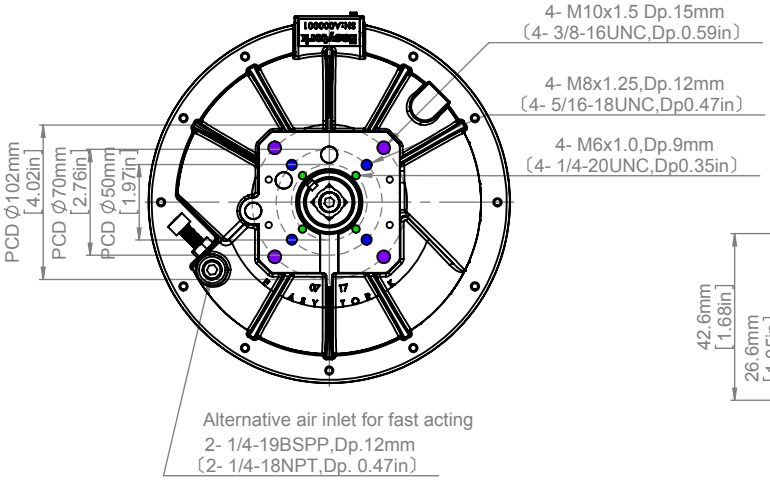

Actuator shown in full CW position
Ancillaries attachment size AA1

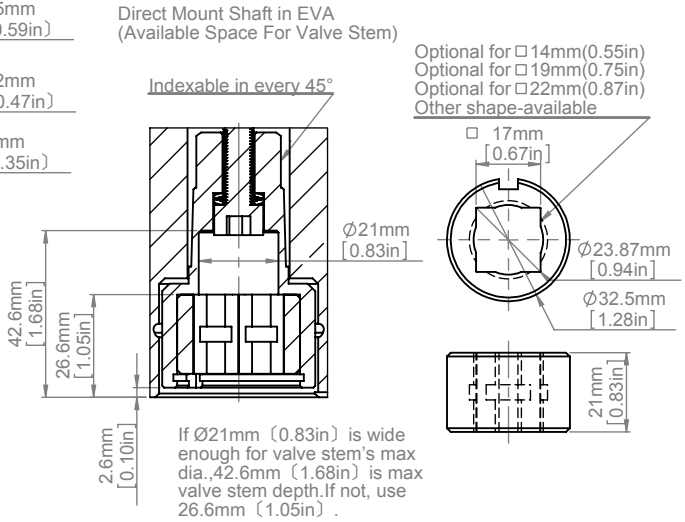

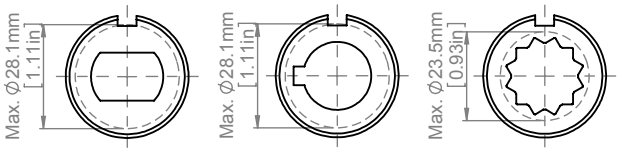

EVA0717-3.25"
Technical Data
Direct Mount

Easytork

MOUNTING DIMENSIONS PER
ISO 5211-2001(E)
DIN 3337(OPTIONAL)
KEYSTONE MOUNTING STANDARD
NAMUR VDI/VDE 3845

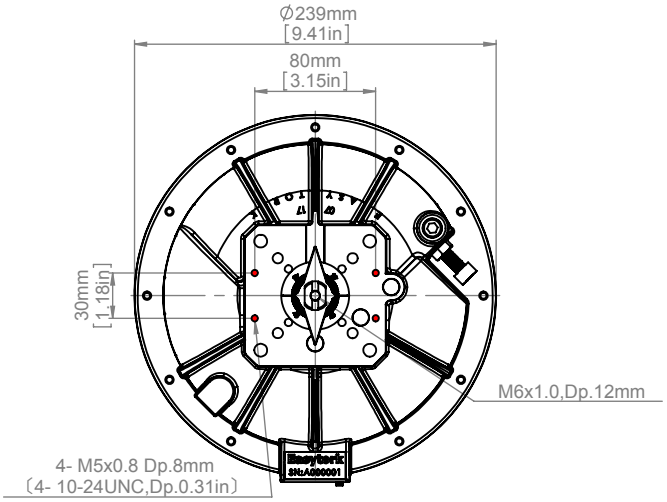

Specifications:

1. Output Torque
DA 151.7 Nm @ 5.5 bar / 1347 in-lb @ 80 psi
FS 100.9 Nm @ 5.5 bar / 895 in-lb @ 80 psi

2. Temperature Rating
-40°C to 120°C / -40°F to 248°F

3. Pressure Rating
Up to 10 bar (150 psi)

4. Weight
5.8 kg / 12.7 lb

5. Displaced Air Volume Per Stroke
0.6 L / 36.6 in^3

6. Travel Adjustment
+/- 5° per stopper bolt for standard

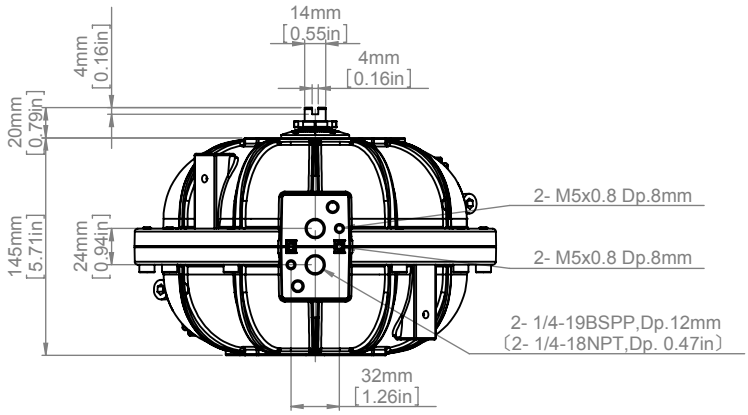

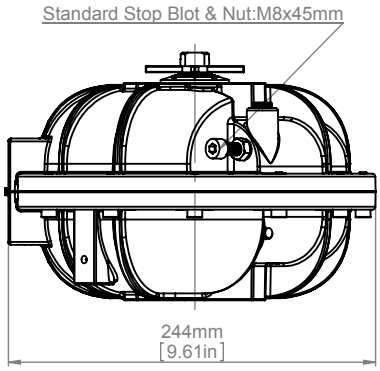

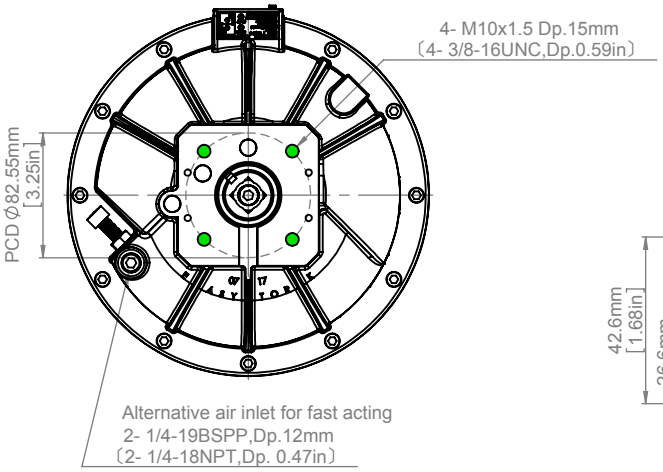
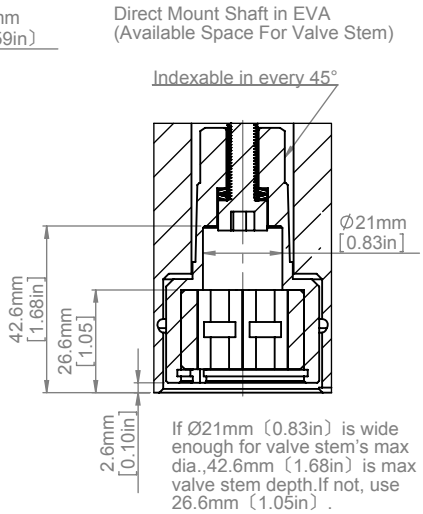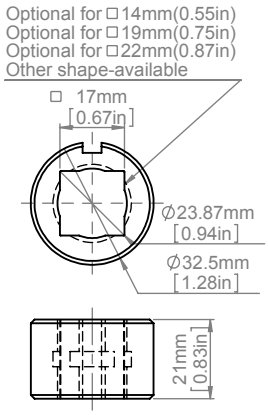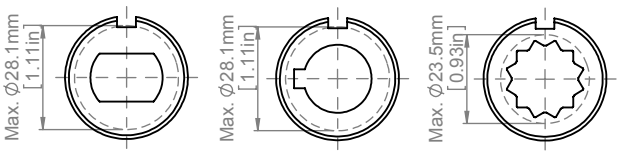
Actuator shown in full CW position
Ancillaries attachment size AA1